Sani-Tech® Gooseneck Faucets

Non-Metallic Sanitary Faucet Systems

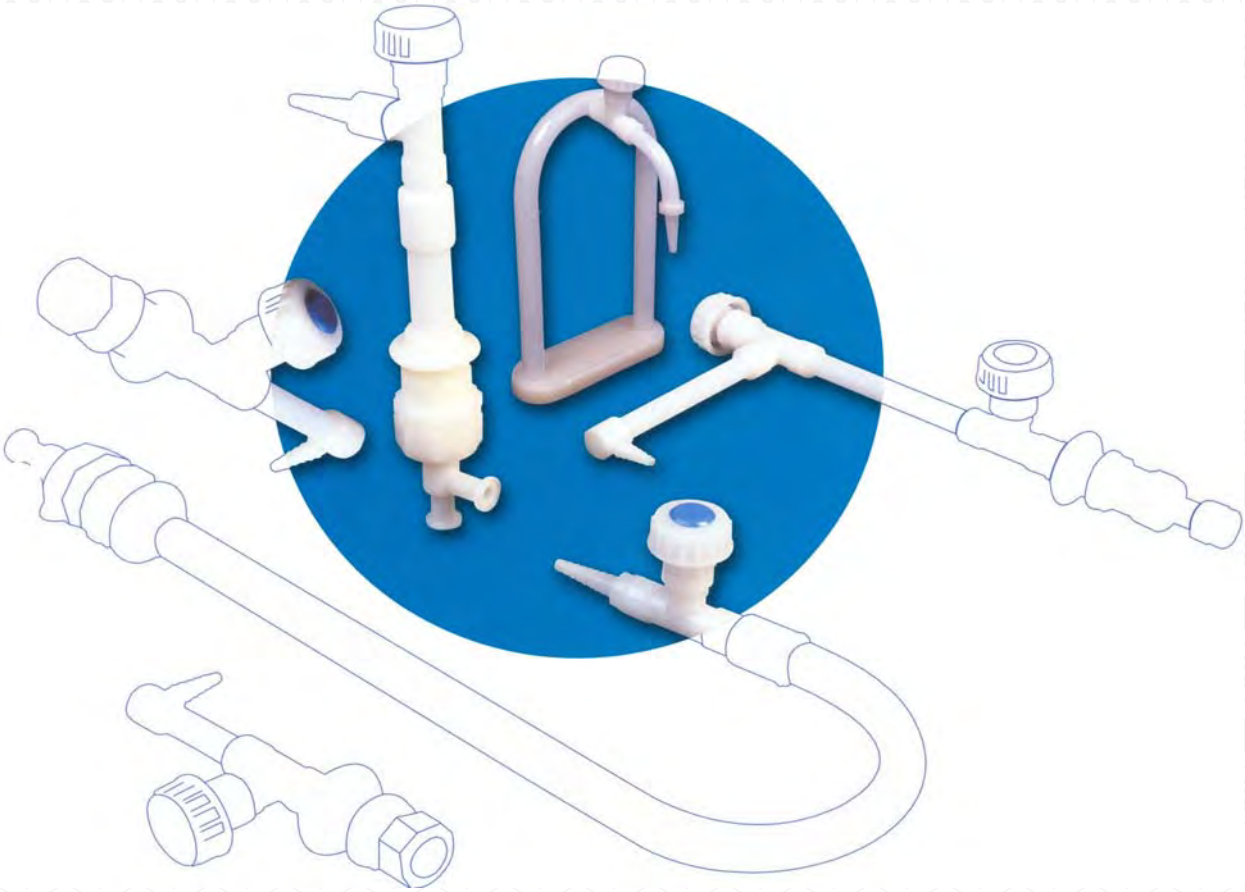

Sani-Tech® Sanitary Gooseneck Faucets utilize the same nonmetallic contact services as our sanitary piping systems. They are available in unpigmented natural Polypropylene or PVDF materials and meet (and/or) surpass FDA, USDA, and USP standards. They are specifically designed for Ultra Pure Water Systems within Biotechnology, Pharmaceutical, Microelectronics and related R&D laboratory areas.

These innovative designs are equipped as a standard with a Sanitary Tri-Clamp end connection and are purposely designed to integrate with Sani-Tech's Sani-Pro® piping system and components. However, a variety of connective technologies are available as options including; male or female pipe threads, socket fusion, and compression fitting styles. In addition, our engineering team is available to help custom design a faucet that will meet your specific requirements.

Bench Mount Non-Recirculating Gooseneck	Page 2
Bench Mount Recirculating Gooseneck	Page 2
Wall Mount Recirculating Gooseneck	Page 3
Wall Mount Faucet w/Vacuum Breaker	Page 3
Wall Mount Non-Recirculating Gooseneck	Page 4
Bench Mount Faucet w/Vacuum Breaker	Page 4
Total Recirculating Gooseneck	Page 5

Bench Mount Faucet w/Vacuum Breaker

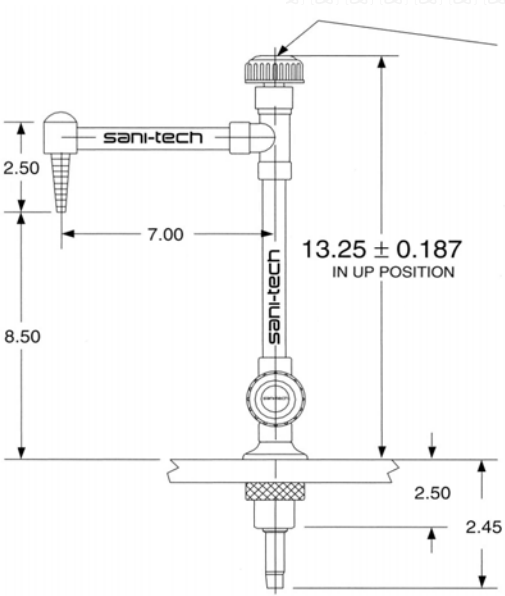

PART #	END
(T,K)GT132893B	TRI-CLAMP
(T,K)GT132893B-08M	1/2" MNPT
(T,K)GT132893B-08F	1/2" FNPT

T = Polypropylene K = Kynar® (PVDF)

Bench Mount Non-Recirculating Gooseneck

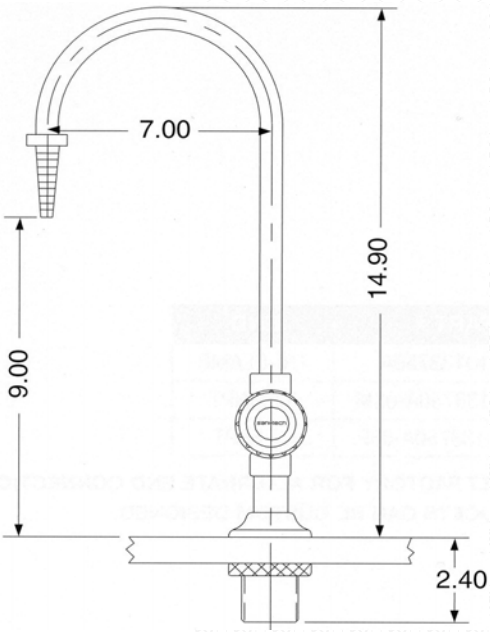

PART #	END
G(T,K)132802A	TRI-CLAMP
G(T,K)132802A-08M	1/2" MNPT
G(T,K)132802A-08F	1/2" FNPT

T = Polypropylene K = Kynar® (PVDF)

Bench Mount Recirculating Gooseneck

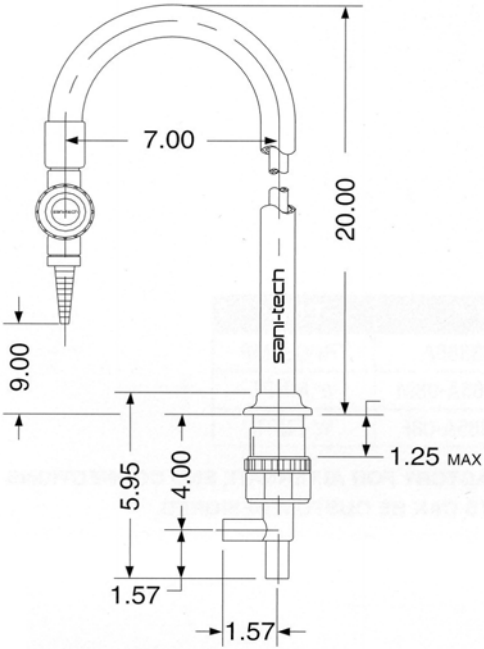

PART #	END
G(T,K)132917A	TRI-CLAMP
G(T,K)132917A-08M	1/2" MNPT
G(T,K)132917A-08F	1/2" FNPT

T = Polypropylene K = Kynar® (PVDF)

Total Recirculating Gooseneck

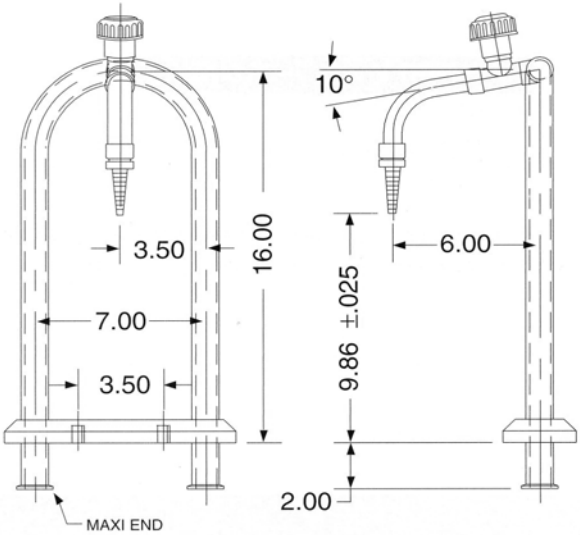

PART #	END
G(T,K)132877A	TRI-CLAMP
G(T,K)132877A-16M	1" MNPT
C(T,K)132877A-16F	1" FNPT

T = Polypropylene K = Kynar® (PVDF)

Wall Mount Faucet w/Vacuum Breaker

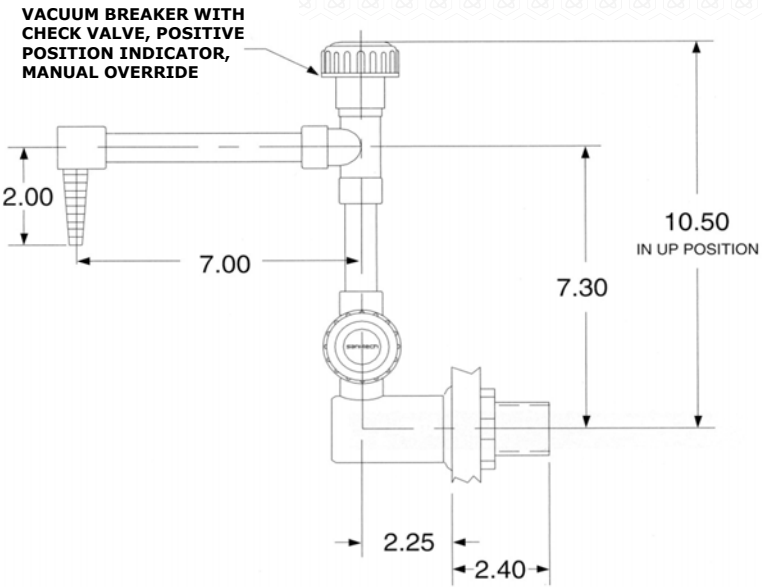

PART #	END
G(T,K)133865A	TRI-CLAMP
G(T,K)133865A-08M	1/2" MNPT
G(T,K)133865A-08F	1/2" FNPT

T = Polypropylene K = Kynar® (PVDF)

Wall Mount Non-Recirculating Gooseneck

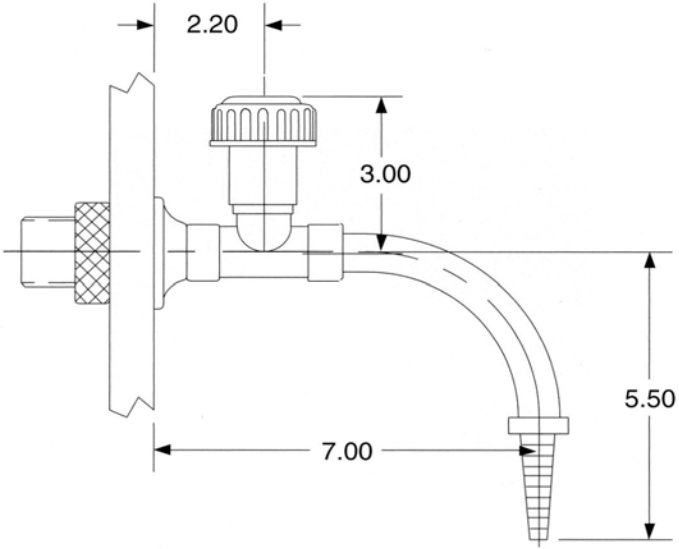

PART #	END
G(T,K)133067A	TRI-CLAMP
G(T,K)133067-08M	1/2 MNPT
G(T,K)133067-08F	1/2 FNPT

T = Polypropylene K = Kynar® (PVDF)

Wall Mount Non-Recirculating Gooseneck

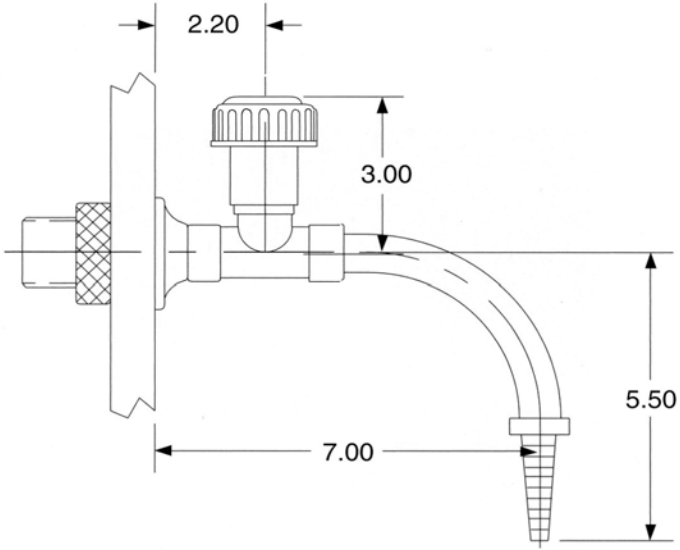

PART #	END
G(T,K)133067A	TRI-CLAMP
G(T,K)133067-08M	1/2 MNPT
G(T,K)133067-08F	1/2 FNPT

T = Polypropylene K = Kynar® (PVDF)

Wall Mount Recirculating Gooseneck

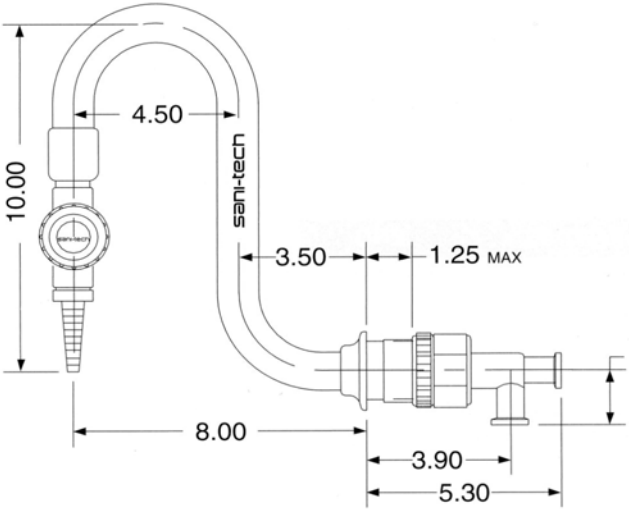

PART #	END
G(T,K)133750A	TRI-CLAMP
G(T,K)133750A-08M	1/2" MNPT
G(T,K)133750A-08F	1/2" FNPT

T = Polypropylene K = Kynar® (PVDF)